***Warranty***

All DESTACO products are thoroughly inspected and tested. We fully guarantee all materials to be free of defects. Any product that is found to be defective will be promptly replaced. This warranty does not apply to any product where the failure of misapplication or abuse, nor is there any warranty expressed or implied as to the merchantability of the product. This warranty is null and void if the product is altered in any way without factory consent. Removing and or modifying the clamp's internal flow restrictor, and or violating any of the conditions mentioned above will void this warranty. DESTACO is not liable for labor, Special or consequential damages and under no circumstances any charges in excess of the invoice amount of the product proven to be defective.

***Maintenance and Service***

For proper operation, clean, dry air is required. This cylinder is shipped with internally applied lubricant and should not require lubricant for the life of the product. Using lubricated air will "wash out" the lubricant applied at the factory. Using lubricated air is acceptable as long as it is maintained over the life of the product and that the lubrication used is compatible with the clamp. (Seal material is Buna-N & Urethane).
An occasional light spray of a penetrating oil at the pivot points will increase the life of the clamp. The frequency or need to do this at all is based on the application where used.

***Installation***

Toggle mechanisms are capable of creating very high forces. The force increases dramatically as the clamp approaches toggle. It may be possible to exert more force than the rated holding capacity of the clamp. This will cause the clamp to fail prematurely.
During initial setup observe the clamp as it cycles paying close attention as it approaches toggle lock. If the clamp hesitates during this time it is likely exerting too much force. Reduce the amount of interference by adjusting the spindle or shimming the clamp until there is slight hesitation only.

To obtain the maximum cycle life from this product it is not recommended exceeding the arm weight shown in the chart. This weight includes the supplied spindle, washers and hex nuts. Although the clamp will operate with more weight than shown, any additional weight added will reduce the cycle life.

| MODEL | MAXIMUM RECOMMENDED ARM WEIGHT |
|---|---|
| 802 | 57 g [2.0 oz] |
| 807 | 100 g [3.5 oz] |
| 810 | 142 g [5.0 oz] |

***Specifications***

| MODEL | BORE | ROD | CLAMP STROKE | VOLUME PER STROKE | NOMINAL WORKING PRESSURE | MAXIMUM OPERATING PRESSURE | MINIMUM OPERATING PRESSURE |
|---|---|---|---|---|---|---|---|
| 802 | 20mm [.787] | 10mm [.394] | 39mm [1.535] | 21 $cm^3$ [1.31 $in^3$] | 5.5 - 6.2 bar [80-90 psi] | 8.3 bar [120 psi] | 2.8 bar [40 psi] |
| 807 | 25mm [.984] | 10mm [.394] | 48mm [1.890] | 43 $cm^3$ [2.65 $in^3$] | 5.5 - 6.2 bar [80-90 psi] | 8.3 bar [120 psi] | 2.8 bar [40 psi] |
| 810 | 32mm [1.260] | 12mm [.472] | 63mm [2.480] | 94 $cm^3$ [5.75 $in^3$] | 5.5 - 6.2 bar [80-90 psi] | 8.3 bar [120 psi] | 2.8 bar [40 psi] |

Copyright DESTACO

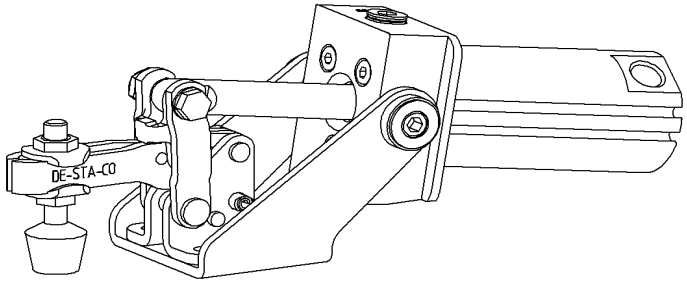


These parts are available through your authorized DESTACO distributor.

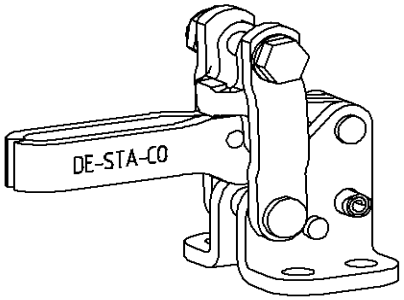


REPLACEMENT CLAMP

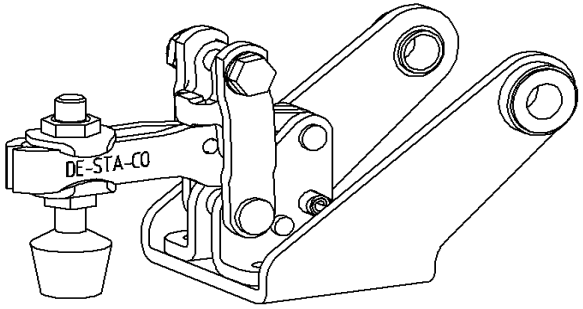


LESS CYLINDER

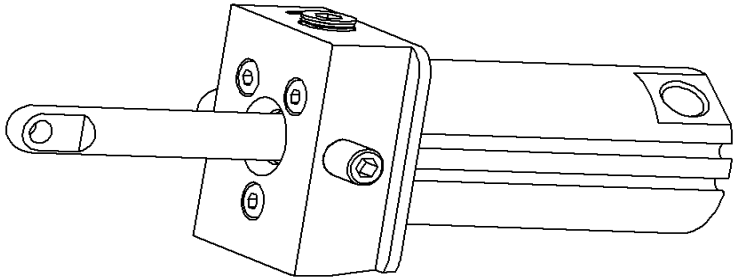

REPLACEMENT CYLINDER ASSEMBLY

| MODEL | REPLACEMENT CLAMP | LESS CYLINDER | REPLACEMENT CYLINDER ASS'Y |
|---|---|---|---|
| 802-U | 802-U-RC | 802-U-LC | 802CYL |
| 802-UE | 802-U-RC | 802-U-LC | 802CYLG |
| 807-U | 807-U-RC | 807-U-LC | 807CYL |
| 807-UE | 807-U-RC | 807-U-LC | 807CYLG |
| 807-S | 807-S-RC | 807-S-LC | 807CYL |
| 807-SE | 807-S-RC | 807-S-LC | 807CYLG |
| 810-U | 810-U-RC | 810-U-LC | 810CYL |
| 810-UE | 810-U-RC | 810-U-LC | 810CYLG |
| 810-S | 810-S-RC | 810-S-LC | 810CYL |
| 810-SE | 810-S-RC | 810-S-LC | 810CYLG |

Copyright DESTACO